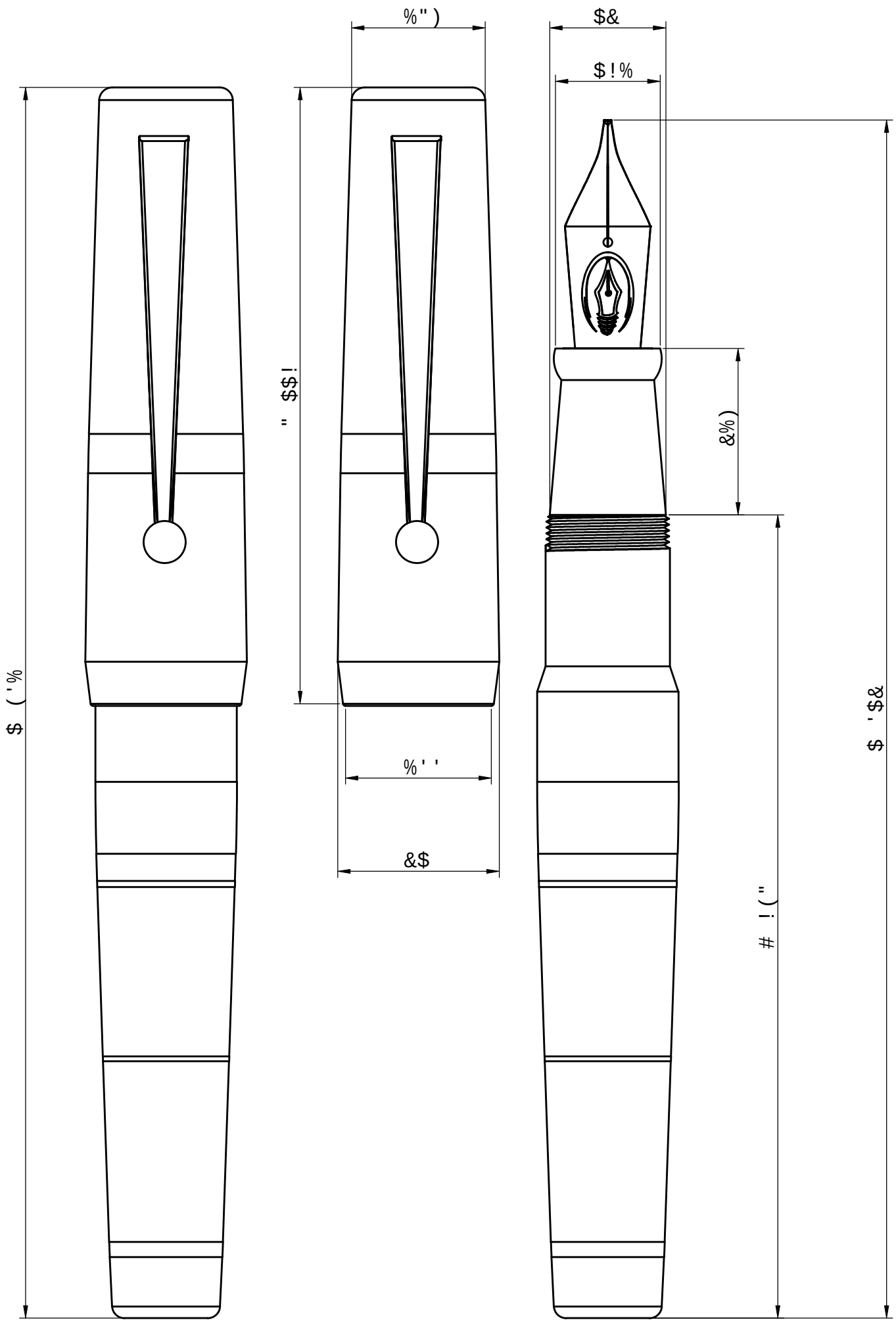

;3;5/

,HF?BIFE3DG@HA>C

<63;: AE	8974 +61	:3=/ ,
:-+5/ "*!	5+:;<8.+;/. ' "# "&	:2//; ! !